HOBART

WAREWASHING

GLASSWASHERS GCP

PREMAX GCP

The compact model for sophisticated needs and ease of use. The **PREMAX** GCP supports the drying process for glasses. With a water consumption of just 1.9 litres this is the most economical glasswasher on the market. No steam escapes when the door is opened. Rack size 400 x 400 mm, compact installation height of 705 mm.

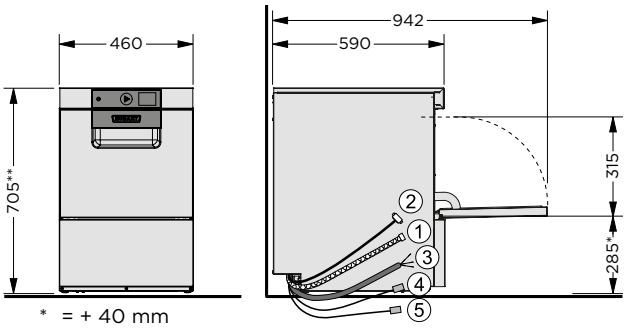

* = + 40 mm
** = 820 mm with integrated reverse osmosis

CONNECTIONS	
① Drain hose	2,000 mm | ID20/OD25
② Supply hose	2,000 mm | R 3/4"
Required flow rate	5 l/min
Flow pressure	0.5 (0.8 with softener) - 10 bar
Max. supply water temperature	60 °C
③ Power cord	2,000 mm
Supply hose for	
④ Detergent	2,500 mm
⑤ Rinse aid	2,500 mm

TECHNICAL DATA	
Cycle times*	75 / 120 sec. and special cycles
Water consumption	1.9 l/rack
Tank capacity	8 l
Tank heating	2,4 kW
Power supply	400 / 50 / 3N (230 / 50 / 1)
BOOSTER LOADING	
Standard	4.2 kW
Alternative	2.8 kW
TOTAL LOADING	
Standard	4.7 kW | 3 x 16A
Alternative	3.3 kW | 3 x 16A
Wash pump	0.6 kW | 220 l/min
Rack size	400 x 400 mm
Loading height	315 mm
Noise level	62 dB (A)
Weight (gross / net)	64 / 58 kg

PRODUCT ADVANTAGES

- **Compact glasswasher:** with an installation height of only 705 mm ideal for narrow places or with integrated reverse osmosis and an installation height of 820 mm ideal for undercounter installation
- **ACTIVE drying:** dry, warm air combined with an innovative airflow system remove the moisture from the glasses and channels it out of the wash chamber. The glasses no longer need to be dried by hand
- **VAPOSTOP:** prevents vapour to escape from machine when door is opened
- **VISIOTRONIC control:** single-button control with remaining time indicator together with text and graphic display
- **1.9 l rinsing:** water consumption per cycle of only 1.9 l which results in a reduction of water, chemicals and energy consumption of 35 %
- **CLIP-IN wash and rinse arms:** wash and rinse arms can be removed with one hand and without any tools
- **Intelligent data documentation:** automatic recording of important operational data and consumptions and indication on the display
- **USB-interface:** comfortable download of operational data in form of a protocol via USB
- **GENIUS-X² fine filter system:** advanced filter system with pre-wash function reduces detergent consumption up to 35%
- **Cold rinsing:** the rinse can be switched from hot to cold water so that you get cooler glasses without any loss of time
- **Intensive programme:** intensive rinse cycle to wash glasses with critical design with raised fresh-water amount
- **Interlocked strainer:** prevents operation without tank strainer
- **Hygiene programme:** for removal of calcium carbonate and other deposits from wash chamber

* Thermostop guarantees required temperatures with cold water and / or 230 V connection, the actual cycle times extend accordingly. For machine protection the water hardness should not exceed 3°dH, if higher we recommend using an integrated water softener or an external water softener of the product line HYDROLINE PROTECT. To avoid spots and streaks on the wash ware, we recommend the usage of an demineralisation cartridge (HYDROLINE STAR / STAR EXTRA) or a reverse osmosis system HYDROLINE PURE.

HOBART GmbH | Robert-Bosch-Straße 17 | 77656 Offenburg | Phone: +49(0)781.600-28 20 | Fax: +49(0)781.600-28 19 | info-export@hobart.de | www.hobart-export.com