HOBART

WAREWASHING

TWO-LEVEL-WASHER **TLW**

PROFI **TLW**

Leistungsstark, platzsparend, flexibel einsetzbar:
Der neue TWO-LEVEL-WASHER ist ein regelrechter Alleskönner und auch ideal für kleinere Küchen geeignet. Denn trotz der zweiten Spülebene benötigt der TLW aufgrund seiner kompakten Konstruktion nicht mehr Platz als eine konventionelle Spülmaschine.

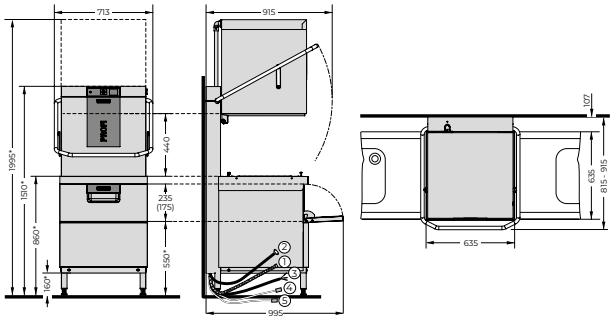

CONNECTIONS	
① Drain hose	2,000 mm | ID 20 / OD 25
② Supply hose	2,000 mm | R 3/4''
Required flow rate	5 l/min
Flow pressure	0.5 (0.8 with softener) - 10 bar
Max. supply water temperature	60 °C
③ Power cord	2,500 mm
Supply hose for	
④ Detergent	2,000 mm
⑤ Rinse aid	2,000 mm

TECHNICAL DATA	
Cycle times*	60 / 90 / 180 sec. and special cycles
Water consumption	Upper Level: 2,0 l/rack Lower Level: 2,5 l/rack
Tank capacity	30 l
Tank heating	3 kW
Power supply	400 / 50 / 3N
BOOSTER LOADING	
Standard	9.1 kW
TOTAL LOADING	
Standard	13.6 kW | 3 x 25A
Alternative	10.4 kW | 3 x 16A
Wash pump	1.2 kW
Rack size	500 x 500 mm
Loading height	Upper Level: 440 mm Lower Level: 235 mm (175 mm in the middle)
Noise level	70 dB (A)
Weight (gross / net)	160 / 140 kg

PRODUCT ADVANTAGES

- **Double capacity:** The TLW provides twice the capacity of a conventional hood-type dishwasher, thanks to an additional wash chamber - but with the same space requirement
- **Maximum flexibility:** Simultaneous washing of different wash ware, such as porcelain dishes, cutlery or cooking utensils, in two separate wash chambers
- **Space saving wash organisation:** For heavily soiled wash ware, the TLW has a special utensil wash programme. Due to the extended washing time, the pre-soaking effect is already integrated into the washing process, so that the wash ware no longer need to be pre-soaked. This saves valuable space in the kitchen organisation
- **VISIOTRONIC-TOUCH control:** colour touchscreen (displays text and graphic) in conjunction with single-button control and remaining cycle time indication
- **WASHSMART app:** controlling your warewash operation with smart technology: status and messages, usage and operating costs, hygiene, service and consumables order
- **SENSO-ACTIVE resource management:** constantly measures the quality of the wash water and keeps the amount of rinsing needed in each rinse cycle to the minimum in order to guarantee a fully hygienic wash result
- **Exhaust energy storage:** the fully enclosed 4-sided hood keeps steam and energy inside the system: energy saving up to 3 kW, less humidity in the kitchen area and better hygienic conditions
- **CLIP-IN wash and rinse arms:** wash and rinse arms can be removed with one hand and without any tools
- **Interlocked strainer:** prevents operation without tank strainer
- **EASY-CLEAN concept:** blue markings in the machine help the operator to identify the components which require cleaning
- **Thermolabel 71 °C:** default temperatures setting acc. European DIN can be switched by operator to a higher thermolable setting

* Thermostop guarantees required temperatures with cold water, the actual cycle times extend accordingly. For machine protection the water hardness should not exceed 3°dH, if higher we recommend using an integrated water softener or a HOBART HYDROLINE water treatment system.

HOBART GmbH | Robert-Bosch-Straße 17 | 77656 Offenburg | Phone: +49 781 600-2820 | Fax: +49 781 600-2819 | info-export@hobart.de | www.hobart-export.com